Cambridge Assessment International Education

Cambridge International AS & A Level

CANDIDATE NAME

CENTRE NUMBER

CANDIDATE NUMBER

7582313268

PHYSICS **9702/23**

Paper 2 AS Level Structured Questions **May/June 2022**

1 hour 15 minutes

You must answer on the question paper.

No additional materials are needed.

INSTRUCTIONS

- Answer **all** questions.
- Use a black or dark blue pen. You may use an HB pencil for any diagrams or graphs.
- Write your name, centre number and candidate number in the boxes at the top of the page.
- Write your answer to each question in the space provided.
- Do **not** use an erasable pen or correction fluid.
- Do **not** write on any bar codes.
- You may use a calculator.
- You should show all your working and use appropriate units.

INFORMATION

- The total mark for this paper is 60.
- The number of marks for each question or part question is shown in brackets [ ].

This document has **16** pages. Any blank pages are indicated.

© UCLES 2022

Data

acceleration of free fall	g	=	$9.81\ \text{m s}^{-2}$
speed of light in free space	c	=	$3.00 \times 10^{8}\ \text{m s}^{-1}$
elementary charge	e	=	$1.60 \times 10^{-19}\ \text{C}$
unified atomic mass unit	1 u	=	$1.66 \times 10^{-27}\ \text{kg}$
rest mass of proton	m_p	=	$1.67 \times 10^{-27}\ \text{kg}$
rest mass of electron	m_e	=	$9.11 \times 10^{-31}\ \text{kg}$
Avogadro constant	N_A	=	$6.02 \times 10^{23}\ \text{mol}^{-1}$
molar gas constant	R	=	$8.31\ \text{J K}^{-1}\ \text{mol}^{-1}$
Boltzmann constant	k	=	$1.38 \times 10^{-23}\ \text{J K}^{-1}$
gravitational constant	G	=	$6.67 \times 10^{-11}\ \text{N m}^2\ \text{kg}^{-2}$
permittivity of free space	ε_0	=	$8.85 \times 10^{-12}\ \text{F m}^{-1}$
	$\left(\frac{1}{4\pi\varepsilon_0}\right.$	=	$\left.8.99 \times 10^{9}\ \text{m F}^{-1}\right)$
Planck constant	h	=	$6.63 \times 10^{-34}\ \text{J s}$
Stefan–Boltzmann constant	σ	=	$5.67 \times 10^{-8}\ \text{W m}^{-2}\ \text{K}^{-4}$

Formulae

uniformly accelerated motion	s	=	$ut + \frac{1}{2}at^2$
	v^2	=	$u^2 + 2as$
hydrostatic pressure	Δp	=	$\rho g \Delta h$
upthrust	F	=	$\rho g V$
Doppler effect for sound waves	f_o	=	$\frac{f_\text{s} v}{v \pm v_\text{s}}$
electric current	I	=	$Anvq$
resistors in series	R	=	$R_1 + R_2 + \ldots$
resistors in parallel	$\frac{1}{R}$	=	$\frac{1}{R_1} + \frac{1}{R_2} + \ldots$

© UCLES 2022

1 A solid metal sphere has a diameter of (3.42 ± 0.02) cm and a mass of (67 ± 2) g.

(a) Calculate the density, in g cm^{-3}, of the metal.

density = ... g cm^{-3} [3]

(b) Determine the percentage uncertainty in the density.

percentage uncertainty = ...% [2]

[Total: 5]

2 An archer releases an arrow towards a target at a velocity of 65.0 m s^{-1} at an angle of 4.30° above the horizontal, as shown in Fig. 2.1.

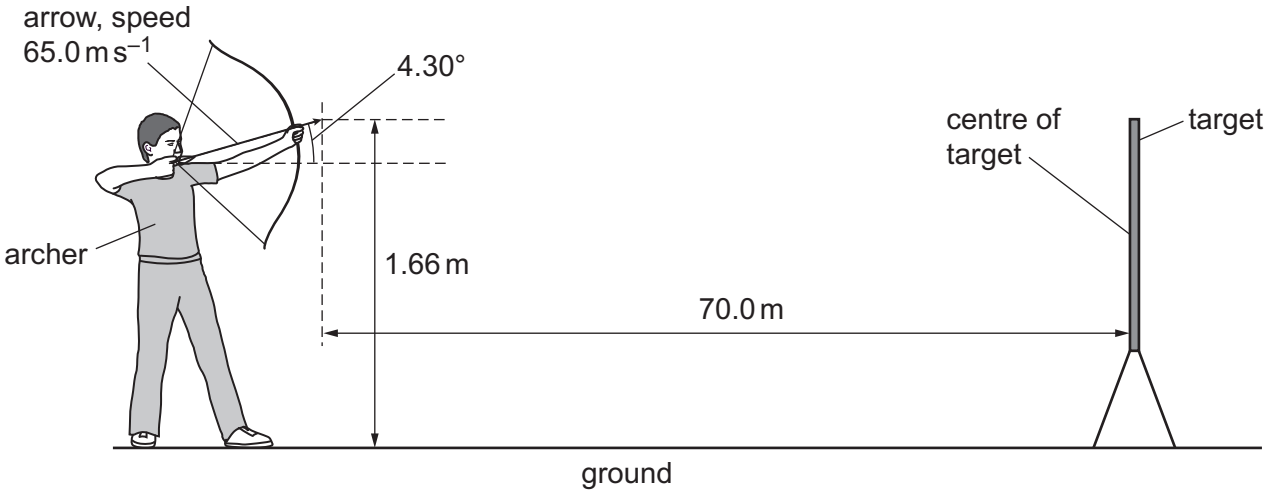

Fig. 2.1 (not to scale)

When released, the tip of the arrow is a horizontal distance of 70.0 m from the target and 1.66 m above the horizontal ground.

The arrow hits the centre of the target.

Assume that air resistance is negligible and that all the mass of the arrow is at its tip.

(a) Show that the time taken for the arrow to reach the target is 1.08 s.

[2]

(b) Calculate the height of the centre of the target above the ground.

height above ground = ... m [3]

(c) By considering energy changes, state and explain how the final kinetic energy of the arrow as it hits the target compares with its initial kinetic energy immediately after release. A numerical calculation is not required.

.....

.....

.....

..... [2]

[Total: 7]

3 **(a)** Define velocity.

.....

..... [1]

(b) A constant driving force of 2400 N acts on a car of mass 1200 kg. The car accelerates from rest in a straight line along a horizontal road.

Assume that the resistive forces acting on the car are negligible.

(i) Calculate the acceleration of the car.

acceleration = ... $m\,s^{-2}$ [1]

(ii) On Fig. 3.1, sketch a graph showing the variation with time t of the velocity v of the car for the first 20 seconds of its motion.

Label this line A.

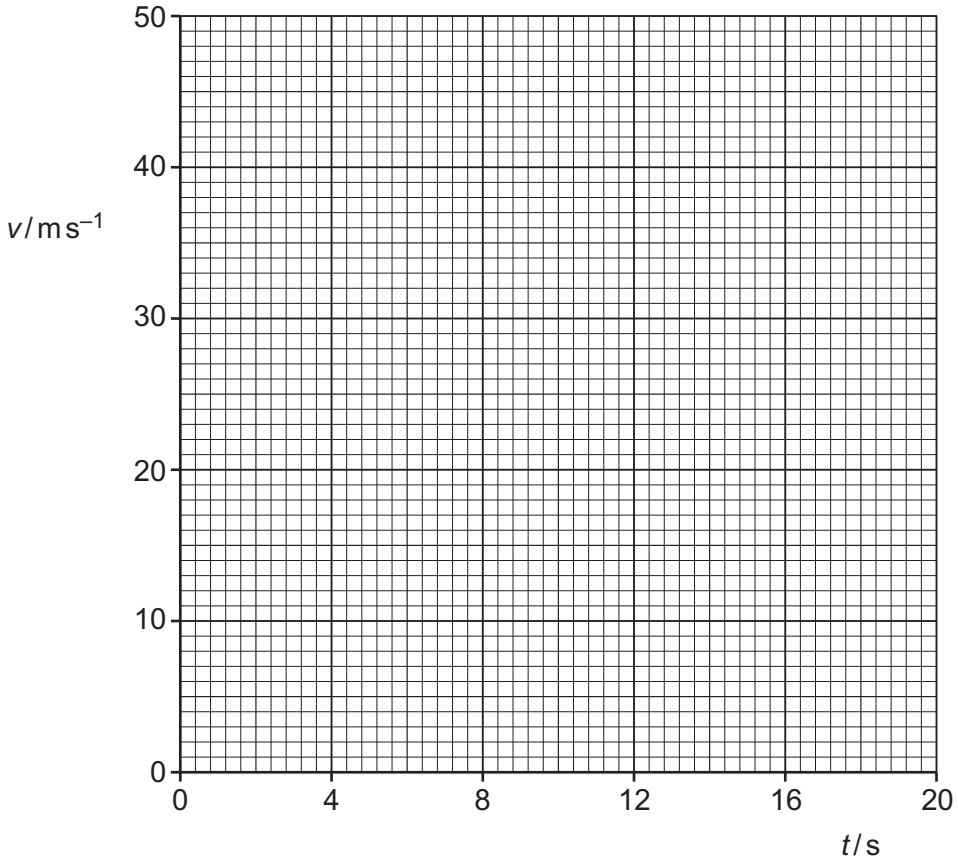

Fig. 3.1

[2]

(c) In reality, a resistive force due to air resistance acts on the car in **(b)**. This resistive force increases with speed until it becomes equal in magnitude to the driving force at time $t = 12\,s$.

(i) On Fig. 3.1, sketch a second line to show the variation with time t of the velocity v of the car for the first 20 seconds of its motion. Label this line B. [3]

(ii) At time $t = 20\,s$, the driving force is increased to 3000 N and remains constant at this value.

Describe how the velocity of the car changes due to this increase in the driving force.

.....

.....

.....

..... [2]

[Total: 9]

4 **(a)** A mass m moves a vertical distance Δh in a uniform gravitational field and gains gravitational potential energy ΔE_P. The acceleration of free fall is g.

Use the concept of work done to show that

$$\Delta E_P = mg\Delta h.$$

[2]

(b) A 0.60 kg mass is attached to a string which is wrapped around the wheel of a generator, as shown in Fig. 4.1.

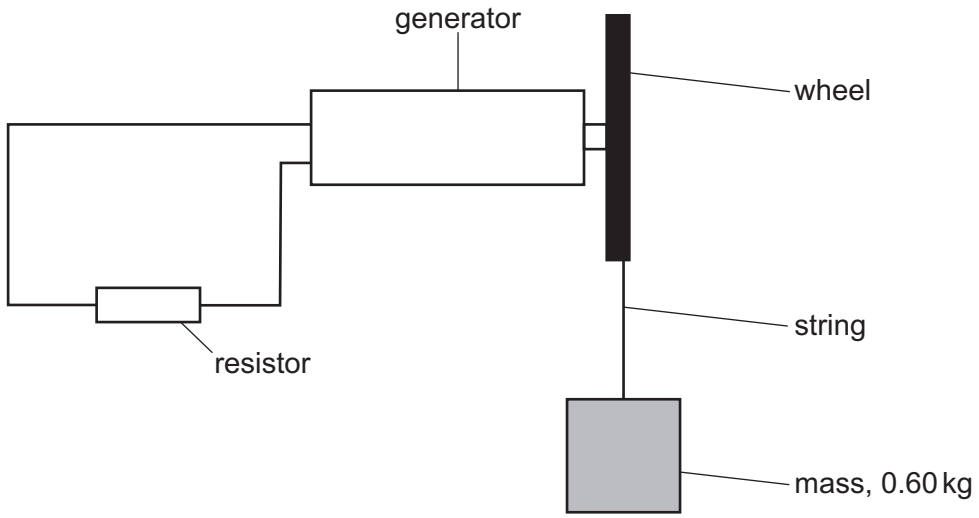

Fig. 4.1

The mass is held stationary above the floor. When released, the mass initially accelerates and then falls at a steady speed and spins the wheel. The generator causes a current in a resistor. Air resistance is negligible.

State the main energy change when the mass is falling at a steady speed.

..... energy to ..... energy. [1]

© UCLES 2022

(c) When falling at a steady speed, the mass in **(b)** falls through a vertical distance of 1.4 m in a time of 4.0 s. This causes a current of 90 mA in the resistor. The resistance of the resistor is 47 Ω.

Calculate:

(i) the rate of work done by the falling mass

rate of work done = ... W [2]

(ii) the power dissipated in the resistor

power = ... W [2]

(iii) the efficiency of the generator.

efficiency = ... [2]

[Total: 9]

BLANK PAGE

© UCLES 2022

5 **(a)** Parallel light rays from the Sun are incident normally on a magnifying glass. The magnifying glass directs the light to an area A of radius *r*, as shown in Fig. 5.1.

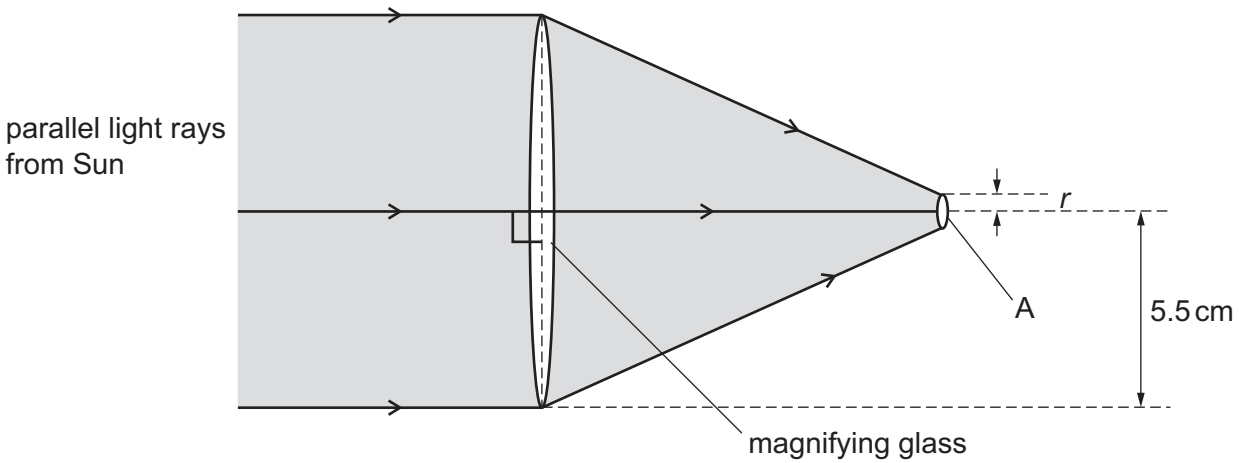

Fig. 5.1 (not to scale)

The magnifying glass is circular in cross-section with a radius of 5.5 cm. The intensity of the light from the Sun incident on the magnifying glass is 1.3 kW m^{-2}.

Assume that all of the light incident on the magnifying glass is transmitted through it.

(i) Calculate the power of the light from the Sun incident on the magnifying glass.

power = ... W [2]

(ii) The value of *r* is 1.5 mm.

Calculate the intensity of the light on area A.

intensity = ... W m^{-2} [1]

(b) A laser emits a beam of electromagnetic waves of frequency 3.7×10^{15} Hz in a vacuum.

(i) Show that the wavelength of the waves is 8.1×10^{-8} m.

[2]

(ii) State the region of the electromagnetic spectrum to which these waves belong.

..... [1]

(iii) The beam from the laser now passes through a diffraction grating with 2400 lines per millimetre. A detector sensitive to the waves emitted by the laser is moved through an arc of 180° in order to detect the maxima produced by the waves passing through the grating, as shown in Fig. 5.2.

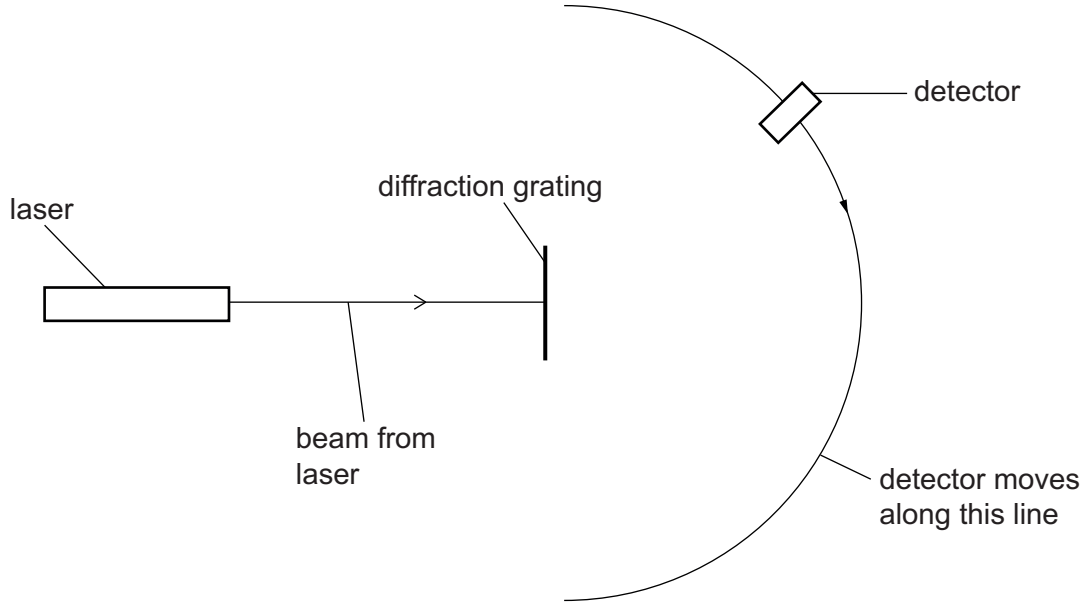

Fig. 5.2

Calculate the number of maxima detected as the detector moves through 180° along the line shown in Fig. 5.2. Show your working.

number of maxima detected = ... [4]

(iv) The laser is now replaced with one that emits electromagnetic waves with a wavelength of 300 nm.

Explain, without calculation, what happens to the number of maxima now detected. Assume that the detector is also sensitive to this wavelength of electromagnetic waves.

.....

.....

..... [2]

[Total: 12]

6 **(a)** **(i)** On Fig. 6.1, sketch the *I*–*V* characteristic of a filament lamp.

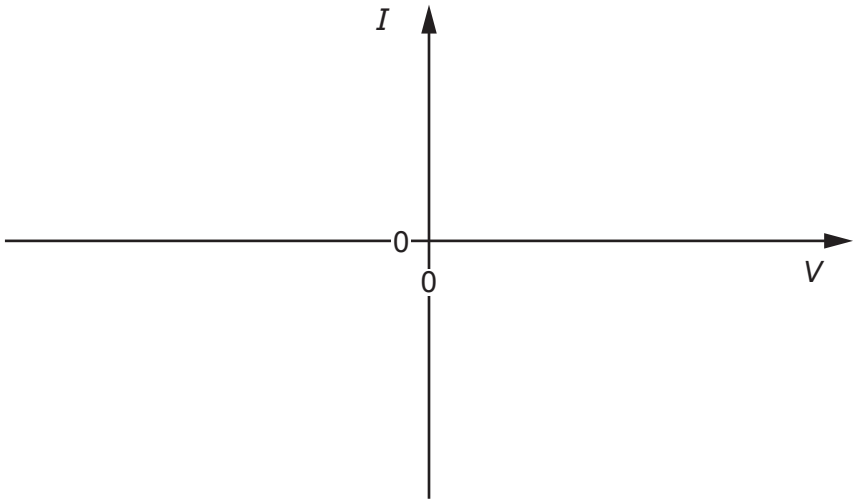

Fig. 6.1

[2]

(ii) Explain the shape of the line in **(a)(i)**.

.....

.....

.....

..... [3]

(b) A conducting wire has length 5.8 m and cross-sectional area $3.4 \times 10^{-8}\,m^2$. The resistivity of the metal of the wire is $5.6 \times 10^{-8}\,\Omega m$.

Calculate the resistance of the wire.

resistance = ... Ω [2]

© UCLES 2022

(c) A resistor of resistance R is placed in a circuit with a cell of negligible internal resistance, two switches S_1 and S_2, a second resistor of resistance $2R$ and three ammeters X, Y and Z. The circuit is shown in Fig. 6.2.

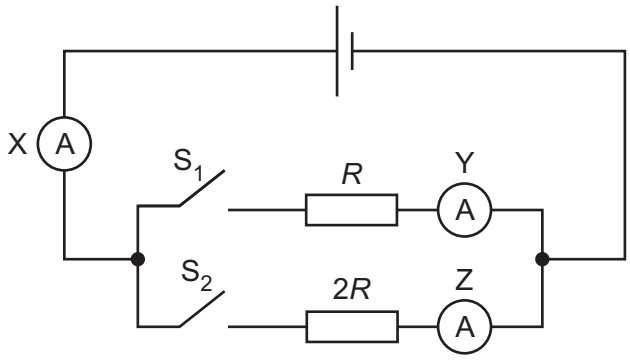

Fig. 6.2

The reading on X is 1.0 A when S_1 is open and S_2 is closed.

Complete Table 6.1.

Table 6.1

position of switches		ammeter readings		
S_1	S_2	reading on X/A	reading on Y/A	reading on Z/A
open	open	0	0	0
open	closed	1.0		
closed	open			
closed	closed			

[4]

[Total: 11]

© UCLES 2022

[Turn over

7 **(a)** Fluorine-18 ($^{18}_{9}F$) is an isotope that decays to an isotope of oxygen (O) by the emission of a β^+ particle.

(i) Complete the nuclear equation for the decay, including all the particles involved.

$$^{18}_{9}F \rightarrow$$

[3]

(ii) A quark in the fluorine-18 nucleus changes flavour during the decay. State this change of flavour.

..... quark to ..... quark. [1]

(b) A hadron has a charge of $-2e$, where e is the elementary charge.

(i) State and explain whether the hadron is a meson or a baryon.

.....

.....

..... [2]

(ii) State a possible quark composition for the hadron.

.....

..... [1]

[Total: 7]

Permission to reproduce items where third-party owned material protected by copyright is included has been sought and cleared where possible. Every reasonable effort has been made by the publisher (UCLES) to trace copyright holders, but if any items requiring clearance have unwittingly been included, the publisher will be pleased to make amends at the earliest possible opportunity.

To avoid the issue of disclosure of answer-related information to candidates, all copyright acknowledgements are reproduced online in the Cambridge Assessment International Education Copyright Acknowledgements Booklet. This is produced for each series of examinations and is freely available to download at www.cambridgeinternational.org after the live examination series.

Cambridge Assessment International Education is part of Cambridge Assessment. Cambridge Assessment is the brand name of the University of Cambridge Local Examinations Syndicate (UCLES), which is a department of the University of Cambridge.

© UCLES 2022